Practice Paper 1

Patterns | Ratio and speed | Percentages | Angles and polygons

Name: _____ Class: _____ Date: _____

30 questions | Answer all questions and show your working.

Give exact answers unless a level of accuracy is stated.

A calculator may be used except where a question states otherwise.

1. The first four terms of a sequence are shown. The same difference continues.

$$7,\ 11,\ 15,\ 19$$

(a) Find the nth term.

(b) Find the 20th term.

(c) Which term is 143?

2. A row of n joined squares is made from equal matchsticks. Adjacent squares share one side. The first three patterns are shown.



Pattern 1 Pattern 2 Pattern 3

The pattern continues in the same way.

(a) How many matchsticks are used for Pattern 4?

(b) Write a formula for Pattern n.

(c) Which pattern uses 151 matchsticks?

3. Each dot pattern has a horizontal row and a vertical row crossing at one shared central dot. Pattern n has n dots on each arm, not counting the centre.

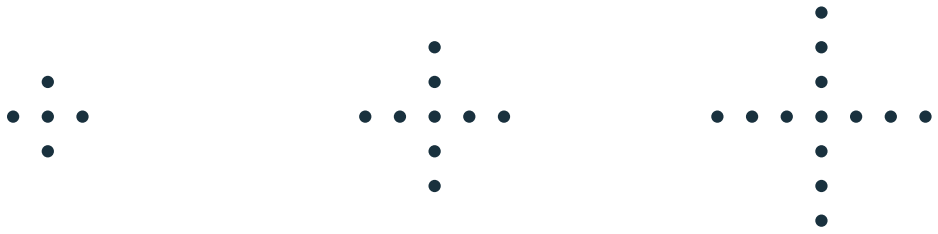

Pattern 1 Pattern 2 Pattern 3

The pattern continues in the same way.

(a) How many dots are in Pattern 4?

(b) Find the number of dots in Pattern n.

(c) Which pattern contains 121 dots?

4. Study the pattern of equalities below.

$$\frac{1}{12}+\frac{1}{4}=\frac{1}{3}$$

$$\frac{1}{20}+\frac{1}{5}=\frac{1}{4}$$

$$\frac{1}{30}+\frac{1}{6}=\frac{1}{5}$$

(a) Write the next equality.

(b) Find p if $\frac{1}{p}+\frac{1}{13}=\frac{1}{12}$.

(c) Use the pattern to find $\frac{1}{90}-\frac{1}{91}$.

5. A sequence starts 40, 35, 30, 25, ... and continues with the same difference.

(a) Find its nth term.

(b) Which term has value -20?

(c) Is -21 a term? Give a reason.

6. Simplify each ratio.

(a) $\frac{3}{4} : \frac{5}{6}$

(b) 1.5 m : 240 cm

7. A:B = 2:3 and B:C = 3:4.

(a) Find A:B:C in its simplest form.

(b) If C = 80, find A.

8. A prize fund of $120 is shared among Asha, Ben and Chen in the ratio 2:3:5. Chen gives one fifth of his share to Asha.

(a) Find their initial shares.

(b) Find Asha's final amount.

9. A box has red and blue counters in the ratio 3:5. After 12 blue counters are added, the ratio becomes 3:6.

(a) Find the original numbers of each colour.

(b) Find the new total number of counters.

10. A recipe for 12 muffins uses 180 g of flour and 120 ml of milk. All quantities scale in the same ratio.

(a) Find the flour needed for 30 muffins.

(b) Find the milk needed for 30 muffins.

11. A money changer uses the fixed rate S$1 = US$0.72, with no fees. Lina changes S$2400 into US dollars and later changes US$420 back.

(a) How many US dollars does she receive initially?

(b) How many Singapore dollars does she receive when changing the money back? Round to the nearest cent.

12. A cyclist travels 18 km at 12 km/h, rests for 15 minutes, then cycles 12 km at 16 km/h.

(a) Find the duration of the first cycling segment.

(b) Find the average speed for the entire outing, including the rest.

13. A rider cycles 24 km from A to B at 12 km/h and returns along the same route at 18 km/h. There is no stop.

(a) Find the total journey time.

(b) Find the average speed for the complete journey.

14. A van leaves a depot at 60 km/h. A car leaves the same depot 20 minutes later, travelling along the same road at 84 km/h. Both maintain constant speeds.

(a) When does the car catch the van?

(b) How far from the depot do they meet?

15. Tap A fills an empty tank in 18 minutes. Tap B fills it in 12 minutes. Both have constant rates. The capacity is 180 litres.

(a) Find their combined filling rate.

(b) How long do they take to fill the empty tank together?

16. A bag is sold for $204.00 after a 15% discount.

(a) Find its original price.

(b) Find the amount saved.

17. A shop marks an item up by 25% on its cost price of $80, then gives a 20% discount on the marked price.

(a) Find the marked price.

(b) Find the selling price.

(c) Find the percentage profit or loss.

18. A club has 400 members. Membership rises by 20%, then falls by 10% of the new membership.

(a) Find the final membership.

(b) Find the overall percentage change from the original membership.

19. For this question, tax is 9%. A restaurant subtotal is $80. Offer A gives 10% off the subtotal, then adds 10% service charge and then 9% tax. Offer B adds 9% tax only. Round only the final totals to cents.

(a) Find the final bill under Offer A.

(b) Find the final bill under Offer B.

(c) Which offer is cheaper, and by how much?

20. A shop sells 220 red and blue notebooks altogether. It sells 20% more red notebooks than blue notebooks. Find the number of each colour.

21. A club has 18 boys and 12 girls. Then 3 girls join and nobody leaves.

(a) Find the original percentage of boys.

(b) Find the new percentage of boys, to 3 significant figures.

(c) Find the decrease in percentage points, to 3 significant figures.

22. Ravi spends $\frac{1}{4}$ of his money on a ticket, then $\frac{2}{5}$ of what remains on food.

He has \$90.00 left.

(a) What fraction of the original amount is left?

(b) Find the original amount.

(c) Find the amount spent on food.

23. A price is reduced by 25%. A student says that increasing the reduced price by 25% restores the original price.

(a) Is the student correct?

(b) What percentage increase on the reduced price would restore the original price? Give an exact answer.

24. A learner spends $\frac{1}{3}$ of a study session on English, then $\frac{1}{4}$ of the remaining time on science. The final 30 minutes are spent on mathematics.

(a) If the session lasts x minutes, write an expression for science time.

(b) Write an expression for mathematics time.

(c) Find the session length.

25. Two straight lines AB and CD intersect at O. The marked angle AOC is 38°. Find x and y.

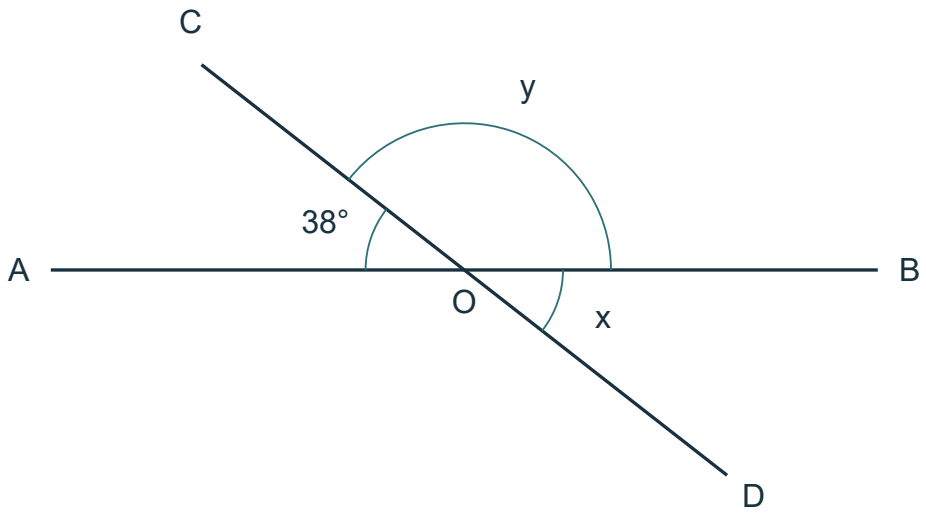

Diagram not drawn to scale.

26. AB is parallel to CD. A transversal crosses them at P and Q. The marked angle at P is 35°. Find x and y. State an angle fact for each answer.

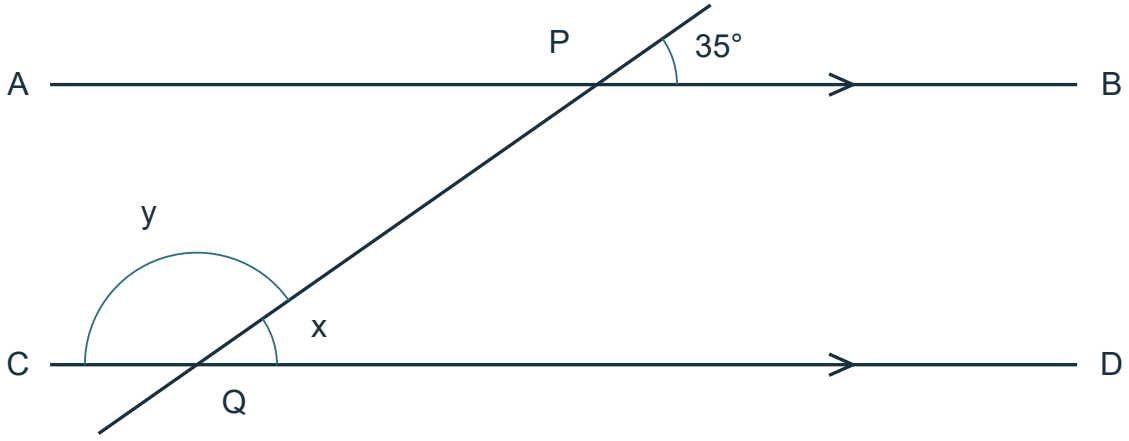

Diagram not drawn to scale.

27. Triangle ABC has AB = AC. BC is extended to D. Angle ACB is 42°. Find x and the exterior angle y.

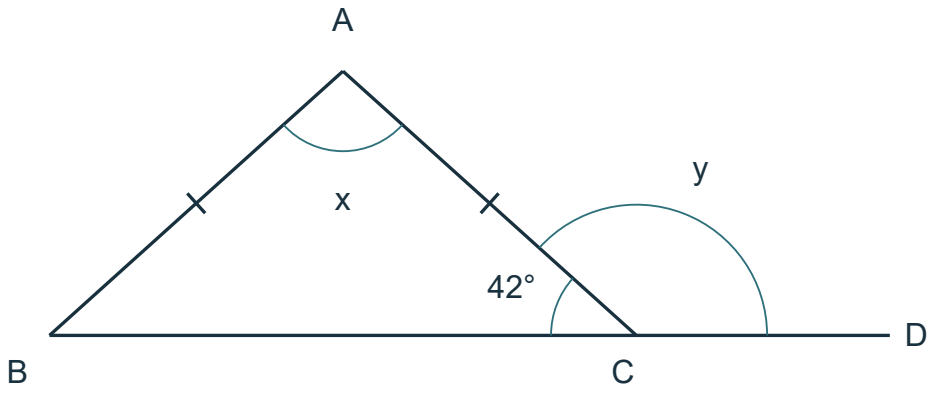

Diagram not drawn to scale.

28. A regular polygon has 5 sides. A second regular polygon has an exterior angle of 36°.

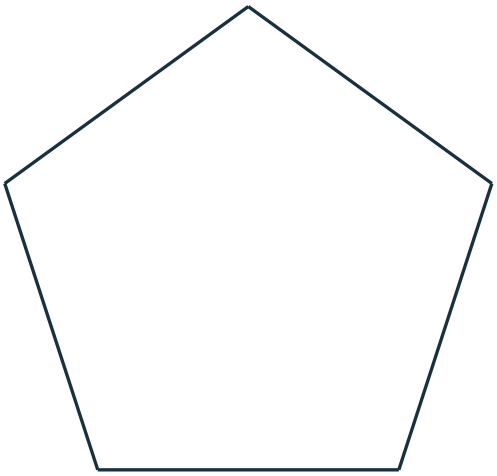

Regular 5-sided polygon

Diagram not drawn to scale.

(a) Find each interior angle of the first polygon.

(b) Find each exterior angle of the first polygon.

(c) Find the number of sides of the second polygon.

29. ABCD is a parallelogram. Angle DAB is 62°. Diagonal AC splits angle DAB into x and 20°. Find x, angle ABC and angle BCD.

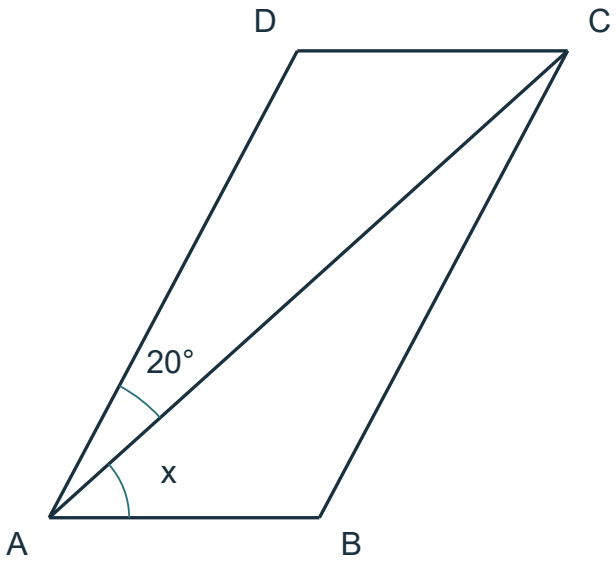

Angle DAB = 62°

Diagram not drawn to scale.

30. AB is parallel to DE. Points B, C and D lie on a straight line. In triangle ABC, angle ABC is 30° and angle BAC is 50°. Find x and y, giving reasons.

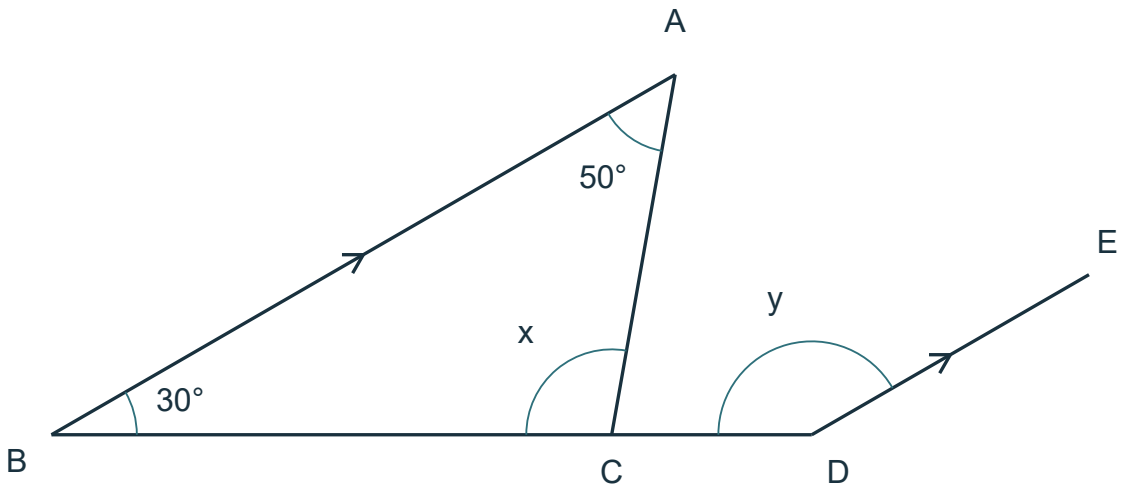

Diagram not drawn to scale.

Final Answers

1. (a) $4n+3$

(b) 83

(c) 35

2. (a) 13

(b) $3n+1$

(c) 50

3. (a) 17 dots

(b) $4n+1$

(c) 30

4. (a) $\frac{1}{42}+\frac{1}{7}=\frac{1}{6}$

(b) 156

(c) $\frac{1}{8190}$

5. (a) $-5n+45$

(b) 13

(c) No; the required term number is $\frac{66}{5}$.

6. (a) 9:10

(b) 5:8

Final Answers

7. (a) 2:3:4

(b) 40

8. (a) \$24.00, \$36.00, \$60.00

(b) \$36.00

9. (a) 36 red; 60 blue

(b) 108 counters

10. (a) 450 g

(b) 300 ml

11. (a) US\$1728.00

(b) S\$583.33

12. (a) $\frac{3}{2}$ hours

(b) 12 km/h

Final Answers

13. (a) $\frac{10}{3}$ hours

(b) $\frac{72}{5}$ km/h

14. (a) $\frac{5}{6}$ hours after the car leaves

(b) 70 km

15. (a) 25 litres per minute

(b) $\frac{36}{5}$ minutes

16. (a) \$240.00

(b) \$36.00

17. (a) \$100.00

(b) \$80.00

(c) No profit or loss; 0%.

18. (a) 432 members

(b) 8% increase

Final Answers

19. (a) \$86.33

(b) \$87.20

(c) Offer A, cheaper by \$0.87.

20. 120 red; 100 blue.

21. (a) 60%

(b) 54.5%

(c) 5.45 percentage points

22. (a) $\frac{9}{20}$

(b) \$200.00

(c) \$60.00

23. (a) No.

(b) $\frac{100}{3}\%$

24. (a) $\frac{x}{6}$ minutes

(b) $\frac{x}{2}$ minutes

(c) 60 minutes

Final Answers

25. x = 38°; y = 142°.

26. x = 35° (corresponding angles); y = 145° (angles on a straight line).

27. x = 96°; y = 138°.

28. (a) $108°$

(b) $72°$

(c) 10 sides

29. x = 42°; angle ABC = 118°; angle BCD = 62°.

30. x = 100° (angle sum of triangle); y = 150° (co-interior angles).